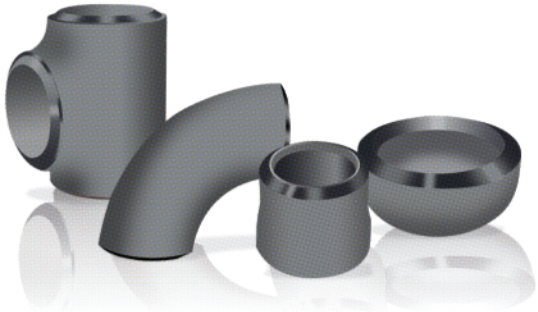

Forged Steel Pipe Fittings

- Forged Steel Socket Weld Fittingss __ P96 ~ P102
- Forged Steel Threaded Fittingss __ P103 ~ P108
- Forged Steel Outlet Fittingss __ P109 ~ P112

TK corporation

90° Elbows, 45° Elbows, Tee, Cross, Coupling

3000# 6000# 9000#

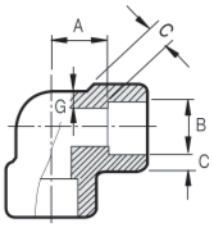

90° Elbow

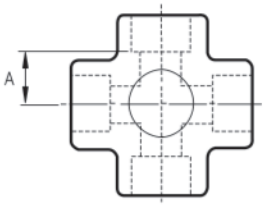

Cross

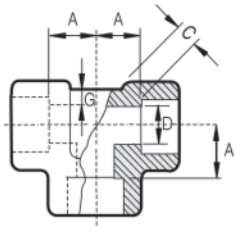

Tee

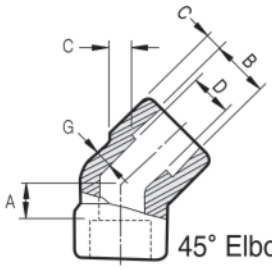

45° Elbow

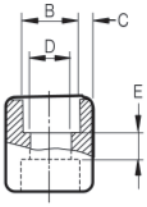

Coupling

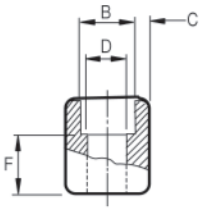

Half Coupling

ASME B16.11

(in millimeters)

Nom. Pipe Size	Socket Bore Dia B	Bore Diameter of Fitting D			Socket Wall Thickness-C						Body Wall Thickness-G		
					Pressure Class Designation						Pressure Class Designation		
		Pressure Class Designation			3000		6000		9000		3000	6000	9000
		3000	6000	9000	Ave.	Min.	Ave.	Min.	Ave.	Min.	Min.	Min.	Min.
1/8	11.2 10.8	7.6 6.1	4.8 3.2		3.18	3.18	3.96	3.43			2.41	3.15	
1/4	14.6 14.2	10.0 8.5	7.1 5.6		3.78	3.30	4.60	4.01			3.02	3.68	
3/8	18.0 17.6	13.3 11.8	9.9 8.4		4.01	3.50	5.03	4.37			3.20	4.01	
1/2	22.2 21.8	16.6 15.0	12.5 11.0	7.2 5.6	4.67	4.09	5.97	5.18	9.35	8.18	3.73	4.78	7.47
3/4	27.6 27.2	21.7 20.2	16.3 14.8	11.8 10.3	4.90	4.27	6.96	6.04	9.78	8.56	3.91	5.56	7.82
1	34.3 33.9	27.4 25.9	21.5 19.9	16.0 14.5	5.69	4.98	7.92	6.93	11.38	9.96	4.55	6.35	9.09
1 1/4	43.1 42.7	35.8 34.3	30.2 28.7	23.5 22.0	6.07	5.28	7.92	6.93	12.14	10.62	4.85	6.35	9.70
1 1/2	49.2 48.8	41.7 40.1	34.7 33.2	28.7 27.2	6.35	5.54	8.92	7.80	12.70	11.12	5.08	7.14	10.15
2	61.7 61.2	53.5 51.7	43.6 42.1	38.9 37.4	6.93	6.04	10.92	9.50	13.84	12.12	5.54	8.74	11.07
2 1/2	74.4 73.9	64.2 61.2			8.76	7.67					7.01		
3	90.3 89.8	79.5 76.4			9.52	8.30					7.62		
4	115.7 115.2	103.8 100.7			10.69	9.35					8.56		

• For Approx Weight See Page 127

90° Elbows, 45° Elbows, Tee, Cross, Coupling

3000# 6000# 9000#

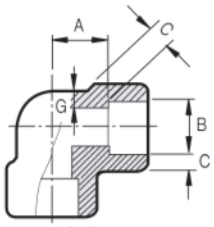

90° Elbow

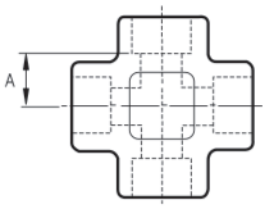

Cross

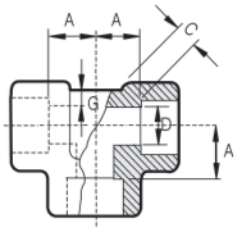

Tee

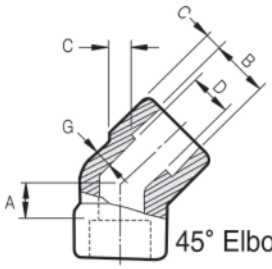

45° Elbow

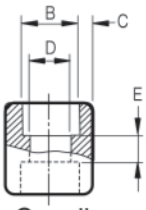

Coupling

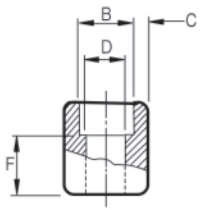

Half Coupling

ASME B16.11

(in millimeters)

Nom. Pipe Size	Depth of Socket Min.-J	Center To Bottom of Socket-A						Laying Lengths	
		90° Elbows, Tees, and Crosses			45° Elbows			Couplings E	Half Couplings F
		Pressure Class Designation			Pressure Class Designation				
		3000	6000	9000	3000	6000	9000		
⅛	9.5	12 10	12 10		9 7	9 7		8 5	17 15
¼	9.5	12 10	14.5 12.5		9 7	9 7		8 5	17 15
⅜	9.5	15 12	17 14		9.5 6.5	12.5 9.5		9.5 3.5	19 16
½	9.5	17 14	20.5 17.5	27 24	12.5 9.5	14 11	17 14	12.5 6.5	24 21
¾	12.5	21 18	24 21	30 27	14.5 11.5	15.5 12.5	20.5 17.5	12.5 6.5	25.5 22.5
1	12.5	24.5 20.5	29 25	34 30	16 12	19.5 15.5	22.5 18.5	16.5 8.5	30.5 26.5
1¼	12.5	29 25	34 30	37 33	19.5 15.5	22.5 18.5	24.5 20.5	16.5 8.5	32 28
1½	12.5	34 30	40 36	40 36	22.5 18.5	27.5 23.5	27.5 23.5	16.5 8.5	34 30
2	16	40 36	43 39	56 52	27.5 23.5	30.5 26.5	30.5 26.5	23 15	43 39
2½	16	43.5 38.5			31 26			24 14	45.5 40.5
3	16	59.5 54.5			34.5 29.5			24 14	47 42
4	19	69 64			43.5 38.5			24 14	50.5 45.5

Union

3000#

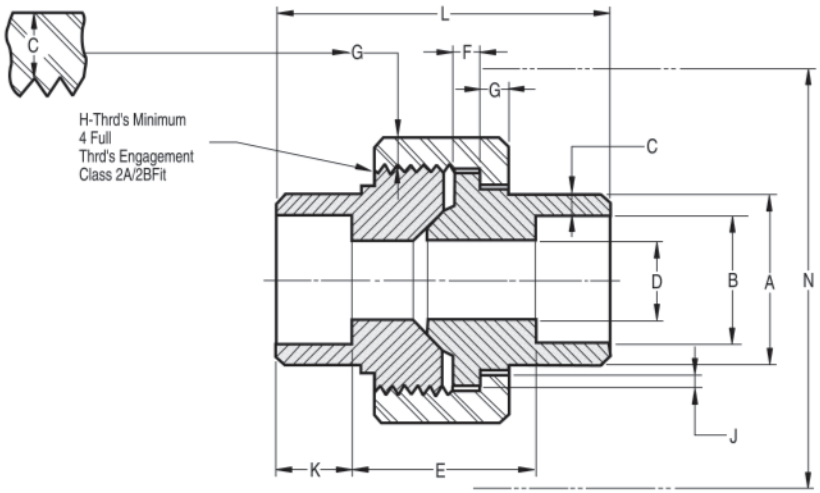

MSS SP-83 (in millimeters)

Nom. Pipe Size	Pipe End Min.	Socket Bore Dia.	Socket Wall Min.	Water Way Bore	Laying Length	Male Flange Min.	Nut Min.	Thrds. Per 25.4 Max.	Bearing Min.	Depth of Socket Min.	Length Assem. Nominal	Clear Assem. Nut
	A	B	C	D	E	F	G	H	J	K	L	N
⅛	21.8	10.92 10.67	3.17	6.83 6.43	22.4 19.0	3.17	3.17	16	1.24	9.6	41.1	49.0
¼	21.8	14.22 13.97	3.30	9.85 9.45	22.4 19.0	3.17	3.17	16	1.24	9.6	41.4	49.0
⅜	25.9	17.78 17.53	3.48	13.92 13.51	26.9 20.6	3.43	3.43	14	1.37	9.6	46.0	55.0
½	31.2	21.84 21.59	4.06	17.47 17.07	26.9 20.6	3.68	3.68	14	1.50	9.6	49.0	57.0
¾	37.1	27.18 26.92	4.27	21.79 21.39	31.8 25.4	4.06	4.06	11	1.68	12.7	56.9	67.0
1	45.5	34.04 33.78	4.95	28.14 27.74	34.3 26.2	4.57	4.44	11	1.85	12.7	62.0	79.0
1¼	54.9	42.67 42.42	5.28	35.76 35.36	40.6 32.5	5.33	5.21	11	2.13	12.7	71.1	94.0
1½	61.5	48.77 48.51	5.54	41.61 41.20	42.2 34.0	5.84	5.59	10	2.31	12.7	76.5	111.0
2	75.2	61.47 61.21	6.05	52.53 52.12	45.5 37.3	6.60	6.35	10	2.69	15.8	86.1	132.0
2½	91.7	74.17 73.66	7.65	64.72 64.31	61.7 52.1	7.49	7.11	8	3.07	15.8	102.4	148.0
3	109.2	90.17 89.66	8.31	77.67 77.27	63.8 53.6	8.25	8.00	8	3.53	15.8	109.0	175.0

Union

3000# 6000#

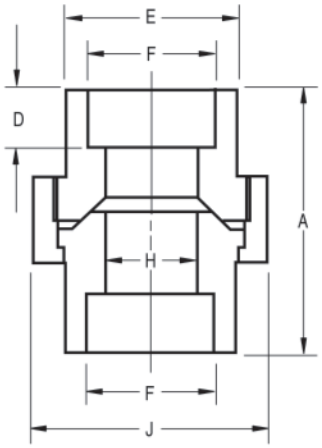

MSS SP-83

(in millimeters)

Nom. Pipe Size	A		D		E		F		H		J(Flat)		Unit weight (kg)	
	3000	6000	3000	6000	3000	6000	3000	6000	3000	6000	3000	6000	3000	6000
¼	45	51	9.5	9.5	21	24.5	14.3	14.3	7.8	6.5	32	38	0.23	0.25
⅜	51	54	9.5	9.5	24.5	31.5	17.8	17.8	10.9	9	38	46	0.35	0.42
½	54	57	9.5	9.5	31.5	41.5	22.2	22.2	14.3	12.3	46	51	0.40	0.85
¾	57	64	13	13	37.5	41.5	27.7	27.7	19.4	16.2	51	60	0.50	1.00
1	64	81	13	13	44.5	48.8	34.5	34.5	25.0	21.2	60	72	0.70	1.30
1¼	72	80	13	13	54	56	43.2	43.2	32.9	29.9	72	77	1.20	2.00
1½	80	89	13	13	61.5	69	49.1	49.1	38.4	34.4	80	94	1.50	3.80
2	89	110	16	16	74.5	90	61.1	61.1	49.5	43.1	94	120	2.58	6.40

Union(O-Ring Type)

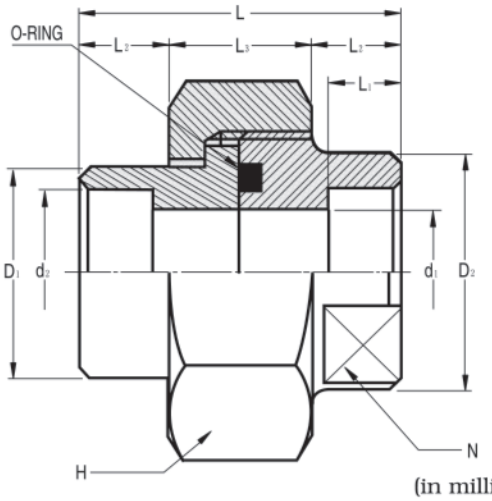

(in millimeters)

Nom Size	d_1	d_2	D_1	D_2	L_1	L_2	L_3	L	N	H	O-RING
¼	10	14.3	22	24	10	10	18	38	21	35HEX	P18
⅜	12	17.8	27	30	10	10	18	38	26	41HEX	P20
½	16	22.2	32	35	12	12	20	44	32	46HEX	G25
¾	20	27.7	37	41	12	12	26	50	38	54HEX	G30
1	25	34.5	44	48	15	15	26	56	44	63HEX	G35
1¼	32	43.2	54	58	15	15	30	60	54	75HEX	G45
1½	38	49.1	63	65	18	18	36	72	60	800CT	G50
2	48	61.1	76	80	18	18	36	72	75	950CT	G65

Rating Pressure:210kg/cm²
Temperature:120° Max

Reducer Insert

3000# 6000#

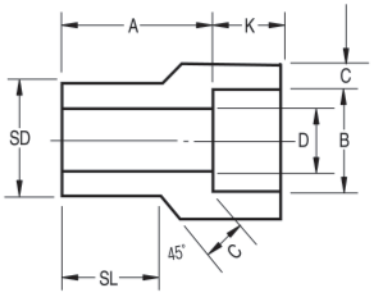

Type 1

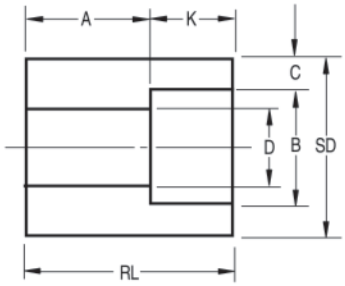

Type 2[1]

MSS SP-79

(in millimeters)

Nom. Pipe Size	Type		Socket		Shank Dia SD	Laying Length A		Bore D		Wall Min. C		Length Min.			
			Dia. B	Depth Min. K								SL		RL	
	3M	6M				3M	6M	3M	6M	3M	6M	3M	6M	3M	6M
⅜ × ¼	1	1	14.22	9.52	17.14	19.0	20.6	9.14	6.35	3.78	4.60	14.22	15.75		
½ × ⅜	1	1	17.65	9.52	21.34	20.6	22.2	12.45	9.14	4.01	5.03	15.75	17.27		
× ¼	2	1	14.22	9.52	21.34	15.8	20.6	9.14	6.35	3.78	4.60	17.27	17.27		
¾ × ½	1	1	21.84	9.52	26.67	22.2	25.4	15.75	11.68	4.67	5.97	17.53	19.05		
× ⅜	2	1	17.65	9.52	26.67	15.8	22.2	12.45	9.14	4.01	5.03		19.05	26.92	
× ¼	2	2	14.22	9.52	26.67	17.5	22.2	9.14	6.35	3.78	4.60			26.92	29.97
1 × ¾	1	1	27.18	12.70	33.35	23.8	28.5	20.83	15.49	4.90	6.96	19.05	20.57		
× ½	2	2	21.84	9.52	33.35	15.8	20.6	15.75	11.68	4.67	5.97		20.57	28.45	
× ⅜	2	2	17.65	9.52	33.35	17.5	22.2	12.45	9.14	4.01	5.03			28.45	33.27
× ¼	2	2	14.22	9.52	33.35	19.0	23.8	9.14	6.35	3.78	4.60			28.45	33.27
1¼ ×1	1	1	33.86	12.70	42.16	25.4	30.2	26.67	20.57	5.69	7.92	20.57	22.35		
× ¾	2	2	27.18	12.70	42.16	17.5	20.6	20.88	15.49	4.90	6.96			31.75	34.80
× ½	2	2	21.84	9.52	42.16	19.0	22.2	15.75	11.68	4.67	5.97			31.75	34.80
× ⅜	2	2	17.65	9.52	42.16	20.6	23.8	12.45	9.14	4.01	5.03			31.75	34.80
× ¼	2	2	14.22	9.52	42.16	22.2	25.4	9.14	6.35	3.78	4.60			31.75	34.80
1½ ×1¼	1	1	42.67	12.70	48.26	28.5	35.1	35.05	29.46	6.07	7.92	22.22	25.40		
×1	2	1	33.86	12.70	48.26	17.5	28.5	26.67	20.57	5.69	7.92		25.40	33.27	
× ¾	2	2	27.18	12.70	48.26	19.0	25.4	20.83	15.49	4.90	6.96			33.27	39.62
× ½	2	2	21.84	9.52	48.26	20.6	26.9	15.75	11.68	4.67	5.97			33.27	39.62
× ⅜	2	2	17.65	9.52	48.26	22.2	28.5	12.45	9.14	4.01	5.03			33.27	39.62
2 ×1½	1	1	48.77	12.70	60.32	31.7	46.0	40.89	34.04	6.35	8.91	25.40	39.62		
×1¼	2	2	42.67	12.70	60.32	20.6	23.8	34.92	29.46	6.07	7.92			38.10	45.97
×1	2	2	33.91	12.70	60.32	22.2	25.4	26.67	20.83	5.69	7.92			38.10	45.97
× ¾	2	2	27.18	12.70	60.32	23.8	26.9	20.83	15.49	4.90	6.96			38.10	45.97
× ½	2	2	21.84	9.52	60.32	25.4	28.5	15.87	11.68	4.67	5.97			38.10	45.97

Reducer Insert

3000# 6000#

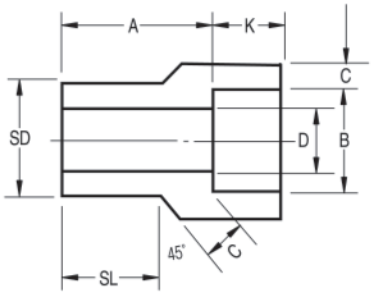

Type 1

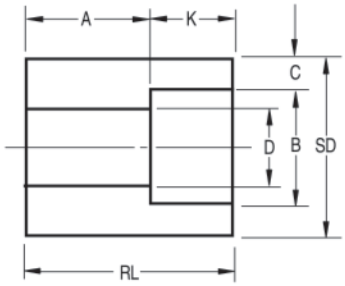

Type 2[1]

MSS SP-79

(in millimeters)

Nom. Pipe Size	Type		Socket		Shank Dia SD	Laying Length A		Bore D		Wall Min. C		Length Min.			
			Dia. B	Depth Min. K								SL		RL	
	3M	6M				3M	6M	3M	6M	3M	6M	3M	6M	3M	6M
⅜ × ¼	1	1	14.22	9.52	17.14	19.0	20.6	9.14	6.35	3.78	4.60	14.22	15.75		
½ × ⅜	1	1	17.65	9.52	21.34	20.6	22.2	12.45	9.14	4.01	5.03	15.75	17.27		
× ¼	2	1	14.22	9.52	21.34	15.8	20.6	9.14	6.35	3.78	4.60	17.27	17.27		
¾ × ½	1	1	21.84	9.52	26.67	22.2	25.4	15.75	11.68	4.67	5.97	17.53	19.05		
× ⅜	2	1	17.65	9.52	26.67	15.8	22.2	12.45	9.14	4.01	5.03		19.05	26.92	
× ¼	2	2	14.22	9.52	26.67	17.5	22.2	9.14	6.35	3.78	4.60			26.92	29.97
1 × ¾	1	1	27.18	12.70	33.35	23.8	28.5	20.83	15.49	4.90	6.96	19.05	20.57		
× ½	2	2	21.84	9.52	33.35	15.8	20.6	15.75	11.68	4.67	5.97		20.57	28.45	
× ⅜	2	2	17.65	9.52	33.35	17.5	22.2	12.45	9.14	4.01	5.03			28.45	33.27
× ¼	2	2	14.22	9.52	33.35	19.0	23.8	9.14	6.35	3.78	4.60			28.45	33.27
1¼ ×1	1	1	33.86	12.70	42.16	25.4	30.2	26.67	20.57	5.69	7.92	20.57	22.35		
× ¾	2	2	27.18	12.70	42.16	17.5	20.6	20.88	15.49	4.90	6.96			31.75	34.80
× ½	2	2	21.84	9.52	42.16	19.0	22.2	15.75	11.68	4.67	5.97			31.75	34.80
× ⅜	2	2	17.65	9.52	42.16	20.6	23.8	12.45	9.14	4.01	5.03			31.75	34.80
× ¼	2	2	14.22	9.52	42.16	22.2	25.4	9.14	6.35	3.78	4.60			31.75	34.80
1½ ×1¼	1	1	42.67	12.70	48.26	28.5	35.1	35.05	29.46	6.07	7.92	22.22	25.40		
×1	2	1	33.86	12.70	48.26	17.5	28.5	26.67	20.57	5.69	7.92		25.40	33.27	
× ¾	2	2	27.18	12.70	48.26	19.0	25.4	20.83	15.49	4.90	6.96			33.27	39.62
× ½	2	2	21.84	9.52	48.26	20.6	26.9	15.75	11.68	4.67	5.97			33.27	39.62
× ⅜	2	2	17.65	9.52	48.26	22.2	28.5	12.45	9.14	4.01	5.03			33.27	39.62
2 ×1½	1	1	48.77	12.70	60.32	31.7	46.0	40.89	34.04	6.35	8.91	25.40	39.62		
×1¼	2	2	42.67	12.70	60.32	20.6	23.8	34.92	29.46	6.07	7.92			38.10	45.97
×1	2	2	33.91	12.70	60.32	22.2	25.4	26.67	20.83	5.69	7.92			38.10	45.97
× ¾	2	2	27.18	12.70	60.32	23.8	26.9	20.83	15.49	4.90	6.96			38.10	45.97
× ½	2	2	21.84	9.52	60.32	25.4	28.5	15.87	11.68	4.67	5.97			38.10	45.97

Reducer Insert

3000# 6000#

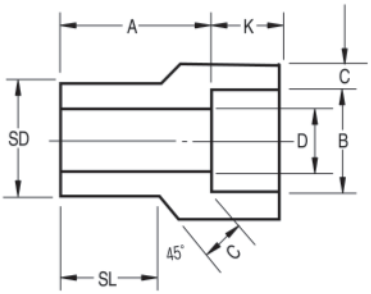

Type 1

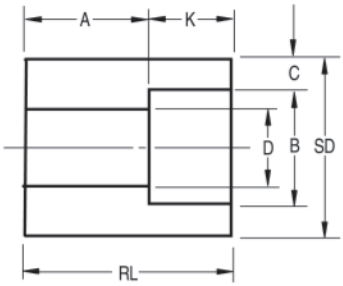

Type 2[1]

MSS SP-79 (in millimeters)

Nom. Pipe Size	Type		Socket Dia. B	Socket Depth Min. K	Shank Dia SD	Laying Length A		Bore D		Wall Min. C		Length Min. SL		Length Min. RL	
	3M	6M				3M	6M	3M	6M	3M	6M	3M	6M	3M	6M
2½×2	1	1	61.24	15.87	73.02	46.0	42.8	52.58	42.92	6.93	10.92	38.10	31.75		
×1½	2	2	48.77	12.70	73.02	34.9	X	40.89	X	6.35	X			53.85	X
×1¼	2	2	42.67	12.70	73.02	36.5	X	34.92	X	6.07	X			53.85	X
×1	2	2	33.91	12.70	73.02	38.1	X	26.67	X	5.69	X			53.85	X
× ¾	2	2	27.18	12.70	73.02	39.6	X	20.83	X	4.90	X			53.85	X
3 ×2½	1	X	74.01	15.87	88.90	38.1	X	62.74	X	8.76	X	31.75	X		
×2	2	X	61.24	15.87	88.90	25.4	X	52.58	X	6.93	X			47.50	X
×1½	2	X	48.77	12.70	88.90	28.5	X	40.89	X	6.35	X			47.50	X
×1¼	2	X	42.67	12.70	88.90	30.1	X	34.92	X	6.07	X			47.50	X
×1	2	X	33.91	12.70	88.90	31.7	X	26.67	X	5.69	X			47.50	X
4 ×3	2	X	89.99	15.87	114.30	33.2	X	77.99	X	9.52	X			60.32	X
×2½	2	X	74.01	15.87	114.30	38.1	X	62.74	X	8.76	X			60.32	X
×2	2	X	61.24	15.87	114.30	38.1	X	52.58	X	6.93	X			60.32	X
×1½	2	X	48.77	12.70	114.30	41.2	X	40.89	X	6.35	X			60.32	X
×1¼	2	X	42.67	12.70	114.30	42.8	X	34.92	X	6.07	X			60.32	X

(1) At the option of the manufacturer Type 2 Reducers may be furnished in Type 1 configuration
(2) 3M and 6M symbols denote 3000 and 6000 classes.

TOLERANCES

Laying Lenght A- Sizes ⅜" thru ¾" +or-1.52mm
Sizes 1 " thru 2 " +or-2.03mm
Sizes 2½" thru 4 " +or-2.54mm
Socket Dia. B- Sizes ⅜" thru 2 " +or-0.13mm
Sizes 2½" thru 4 " +or-0.20mm

Bore D- ⅜" thru 2" +or-0.76mm
Sizes 2½" thru 4" +or-1.52mm
Shank Dia. SD- Sizes ¼" thru 1½" +or-0.25mm
Sizes 2 " thru 3 " +or-0.51mm
Sizes 4 " +or-0.76mm

Cap

3000# 6000#

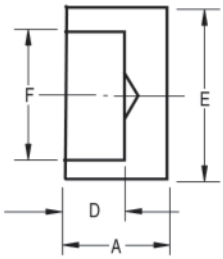

(in millimeters)

Nom. Pipe Size	A		E		F		D		Unit weight (kg)	
	3000	6000	3000	6000	3000	6000	3000	6000	3000	6000
¼	16	18	22	23	14.3	14.3	9.5	9.5	0.04	0.04
⅜	16	18	25.5	26.5	17.8	17.8	9.5	9.5	0.05	0.06
½	17.5	25.5	31.5	34	22.2	22.2	9.5	9.5	0.07	0.15
¾	22.5	32	37	41	27.7	27.7	13	13	0.13	0.27
1	29	35.5	45.5	50	34.5	34.5	13	13	0.21	0.45
1¼	29	39	55	58.5	43.2	43.2	13	13	0.37	0.67
1½	32	40	61.5	66.5	49.1	49.1	13	13	0.60	0.89
2	42	50	75	83	61.1	61.1	16	16	0.99	1.75
2½	42	55	91.5	98	77.1	77.1	16	16	1.50	2.66
3	42	60	109	118	90.1	90.1	16	16	2.30	4.33
4	50	70	138	149	115.3	115.3	20	20	4.00	7.91

90° Elbows,45° Elbows Tees

2000# 3000# 6000#

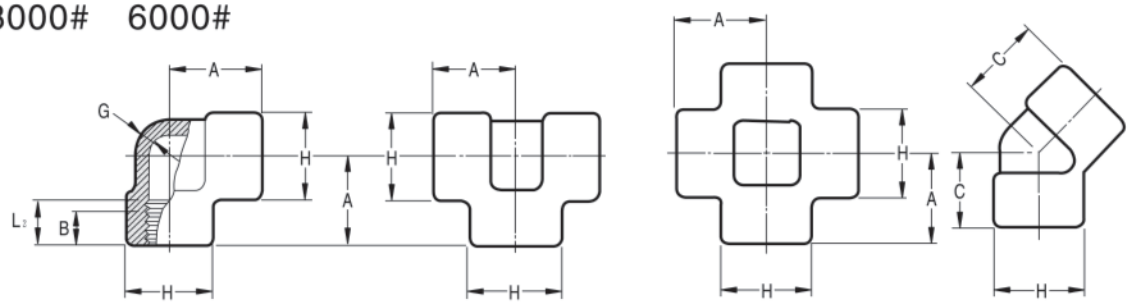

ASME B16.11 (in millimeters)

Nominal Pipe Size	Center to End Elbows Tees Crosses A			Center to End 45° Elbows C			Outside Diameter of Band H			Minimum Wall Thickness G			Length of Thread, Min	
	2000	3000	6000	2000	3000	6000	2000	3000	6000	2000	3000	6000	B	L_2
1/8	21	21	25	17	17	19	22	22	25	3.18	3.18	6.35	6.4	6.7
1/4	21	25	28	17	19	22	22	25	33	3.18	3.30	6.60	8.1	10.2
3/8	25	28	33	19	22	25	25	33	38	3.18	3.51	6.98	9.1	10.4
1/2	28	33	38	22	25	28	33	38	46	3.18	4.09	8.15	10.9	13.6
3/4	33	38	44	25	28	33	38	46	56	3.18	4.32	8.53	12.7	13.9
1	38	44	51	28	33	35	46	56	62	3.68	4.98	9.93	14.7	17.3
1 1/4	44	51	60	33	35	43	56	62	75	3.89	5.28	10.59	17.0	18.0
1 1/2	51	60	64	35	43	44	62	75	84	4.01	5.56	11.07	17.8	18.4
2	60	64	83	43	44	52	75	84	102	4.27	7.14	12.09	19.0	19.2
2 1/2	76	83	95	52	52	64	92	102	121	5.61	7.65	15.29	23.6	28.9
3	86	95	106	64	64	79	109	121	146	5.99	8.84	16.64	25.9	30.5
4	106	114	114	79	79	79	146	152	152	6.55	11.18	18.67	27.7	33.0

• For Approx Weight See Page 122

Coupling, Half Coupling, Cap

3000# 6000#

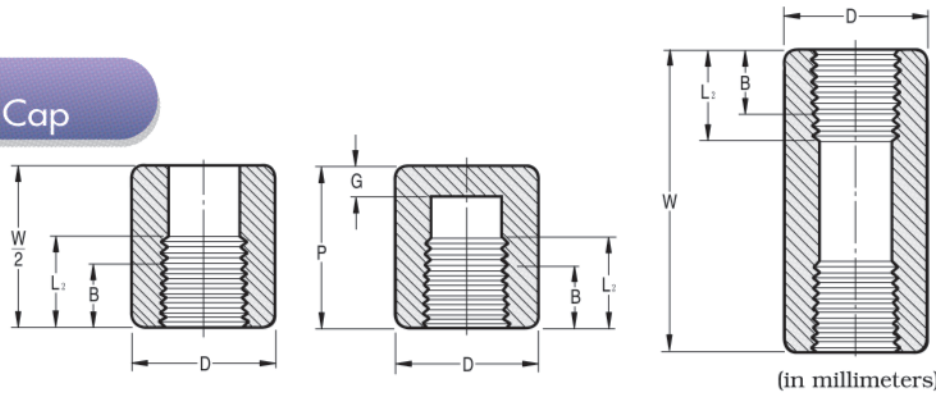

ASME B16.11 (in millimeters)

Nominal Pipe Size	End to End Couplings W	End to End Caps P		Outside Diameter D		End Wall Thickness G Min.		Length of Thread, Min	
	3000 & 6000	3000	6000	3000	6000	3000	6000	B	L_2
1/8	32	19		16	22	4.8		6.4	6.7
1/4	35	25	27	19	25	4.8	6.4	8.1	10.2
3/8	38	25	27	22	32	4.8	6.4	9.1	10.4
1/2	48	32	33	28	38	6.4	7.9	10.9	13.6
3/4	51	37	38	35	44	6.4	7.9	12.7	13.9
1	60	41	43	44	57	9.7	11.2	14.7	17.3
1 1/4	67	44	46	57	64	9.7	11.2	17.0	18.0
1 1/2	79	44	48	64	76	11.2	12.7	17.8	18.4
2	86	48	51	76	92	12.7	15.7	19.0	19.2
2 1/2	92	60	64	92	108	15.7	19.0	23.6	28.9
3	108	65	68	108	127	19.0	22.4	25.9	30.5
4	121	68	75	140	159	22.4	28.4	27.7	33.0

• For Approx Weight See Page 122

Plug, Bushing

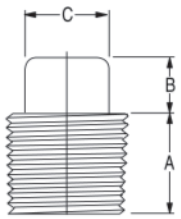

Spuare Head Plug

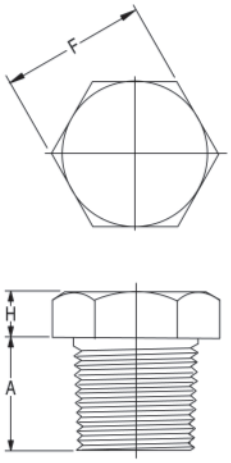

Hex Head Plug

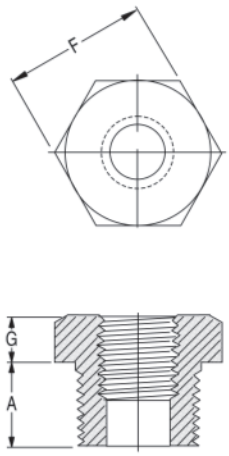

Hex Head Bushing

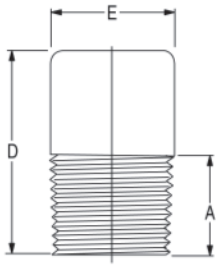

Round Head Plug

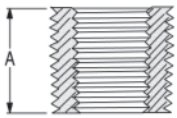

Flush Bushing

ASME B16.11 (in millimeters)

Nominal Pipe Size	Length (Minimum) A	Plugs Square Head		Plugs Round Gead		Hex Plugs & Bushings		
		Height of Square (Minimum) B	Width Flats (Minimum) C	Nominal Diameter of Head E	Length (Minimum) D	Width Flats (Nominal) F	Hex Height Min. Bushing G	Hex Height Min. Plug H
⅛	10.0	6	7.0	10	35	11.0		6
¼	11.0	6	10.0	14	41	16.0	3	6
⅜	13.0	8	11.0	18	41	18.0	4	8
½	14.0	10	14.0	21	44	22.0	5	8
¾	16.0	11	16.0	27	44	27.0	6	10
1	19.0	13	21.0	33	51	36.0	6	10
1¼	21.0	14	24.0	43	51	46.0	7	14
1½	21.0	16	28.0	48	51	50.0	8	16
2	22.0	18	32.0	60	64	65.0	9	18
2½	27.0	19	36.0	73	70	75.0	10	19
3	28.0	21	41.0	89	70	90.0	10	21
4	32.0	25	65.0	114	76	115.0	13	25

• For Approx Weight See Page 126

Union

3000#

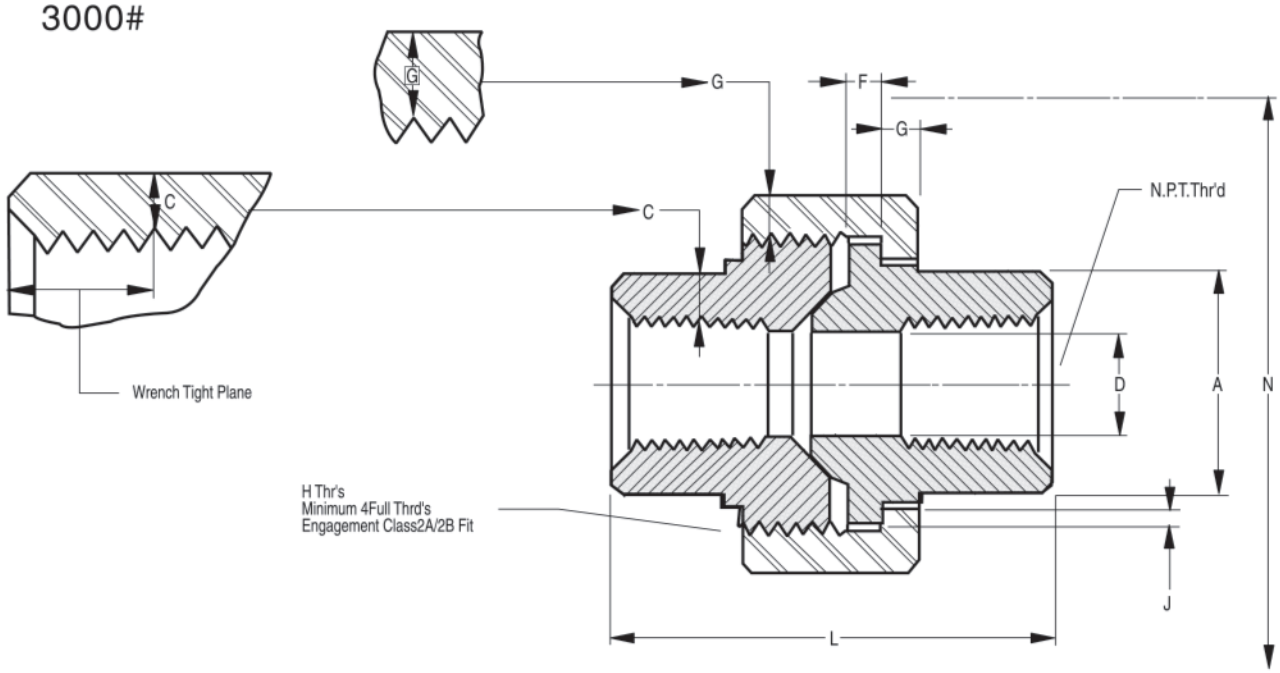

MSS SP-83

(in millimeters)

Nom. Pipe Size	Pipe End Min. A	Wall Min. C	Water Way Bore D	Male Flange Min. F	Nut Min. G	Thrds. Per 25.4 Max. H	Bearing Min. J	Length Assem. Nominal L	Clear Assem. Nut N
⅛	21.8	3.18	6.83 6.43	3.17	3.2	16	1.24	41.4	49.0
¼	21.8	3.30	9.85 9.45	3.17	3.2	16	1.24	41.4	49.0
⅜	25.9	3.50	13.92 13.51	3.43	3.4	14	1.37	46.0	55.0
½	31.2	4.09	17.47 17.07	3.68	3.7	14	1.50	49.0	57.0
¾	37.1	4.27	21.79 21.39	4.06	4.1	11	1.68	56.9	67.0
1	45.4	4.99	28.14 27.74	4.57	4.4	11	1.85	62.0	79.0
1¼	54.9	5.28	35.76 35.36	5.33	5.2	11	2.13	71.1	94.0
1½	61.5	5.54	41.61 41.20	5.84	5.6	10	2.31	76.4	111.0
2	75.2	6.05	52.53 52.12	6.60	6.4	10	2.69	86.1	132.0
2½	91.7	7.68	64.72 64.31	7.49	7.1	8	3.07	102.4	148.0
3	109.2	8.31	77.67 77.27	8.25	8.0	8	3.53	109.0	175.0

Union(O-Ring Type)

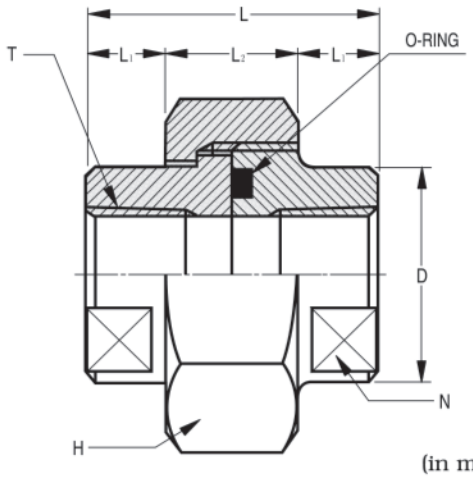

(in millimeters)

Nom Size (PT)	D	L_1	L_2	L	N	H	O-Ring
¼	22	10	18	38	19	35 HEX	P18
⅜	27	10	18	38	23	41 HEX	P20
½	32	12	20	44	29	46 HEX	G25
¾	38	12	26	50	34	54 HEX	G30
1	47	15	26	56	41	63 HEX	G35
1¼	56	15	30	60	51	75 HEX	G45
1½	63	18	36	72	60	80 OCT	G50
2	76	18	36	72	71	95 OCT	G65

Rating Pressure:201kg/cm²
Temperature:120°C Max.

Union

3000# 6000#

(in millimeters)

Nom Size T×T1	d	H	L	L1	L2	Unit Weight (kg)
3/8×1/4	7.1	19	14	8	14	0.05
1/2×1/4	7.1	24	19	9	14	0.09
1/2×3/8	8.9	24	19	9	14	0.09
3/4×1/4	7.1	30	19	10	14	0.15
3/4×3/8	8.9	30	19	10	14	0.15
3/4×1/2	11.9	30	19	10	19	0.15
1×3/8	8.9	36	24	11	14	0.27
1×1/2	11.9	36	24	11	19	0.27
1×3/4	16.0	36	24	11	19	0.27
1-1/4×1/2	11.9	46	24	12	19	0.45
1-1/4×3/4	16.0	46	24	12	19	0.45
1-1/4× 1	20.1	46	24	12	24	0.45
1-1/2×3/4	16.0	50	25	14	19	0.62
1-1/2×1	20.1	50	25	14	24	0.62
1-1/2×1-1/4	27.9	50	25	14	24	0.62
2×1	20.1	65	26	16	24	1.03
2×1-1/4	27.9	65	26	16	24	1.03
2×1-1/2	32.0	65	26	16	25	1.03
2-1/2×1-1/4	27.9	80	38	18	24	1.51
2-1/2×1-1/2	32.0	80	38	18	25	1.51
2-1/2×2	39.9	80	38	18	26	1.51
3×1-1/2	32.0	95	40	20	25	2.22
3×2	39.9	95	40	20	26	2.22
3×2-1/2	55.1	95	40	20	38	.2.22

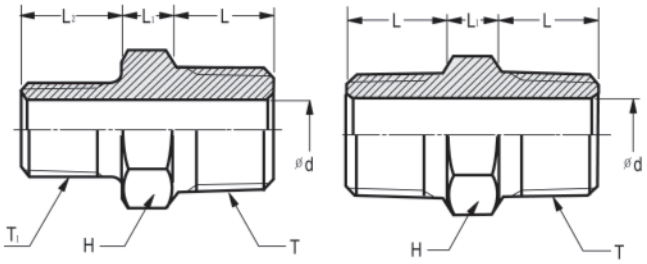

Nom. Size T	d	H	L	L1	Unit Weight (kg)
1/8	4.1	12	10	6	0.03
1/4	7.1	17	14	8	0.04
3/8	8.9	19	14	8	0.05
1/2	11.9	24	19	9	0.09
3/4	16.0	30	19	10	0.15
1	20.1	36	24	11	0.27
1-1/4	27.9	46	24	12	0.45
1-1/2	32.0	50	25	14	0.62
2	39.9	65	26	16	1.03
2-1/2	55.1	80	38	18	1.51
3	65.0	95	40	20	2.22

Nipple Outlet

3000#

(in millimeters)

Nom. Pipe Size	d	H	L	L_1	L_2	Unit Weight (kg)
36- ¾	½	88.9	23.9	14.0	21.3	0.36
36-1	¾	88.9	30.2	18.8	26.7	0.56
36-1¼	1	88.9	36.6	24.4	33.3	0.84
36-1½	1¼	88.9	44.5	32.5	42.2	1.22
36-2	1½	88.9	50.8	38.1	48.3	2.00
36-2½	2	88.9	65.0	49.3	60.5	3.12

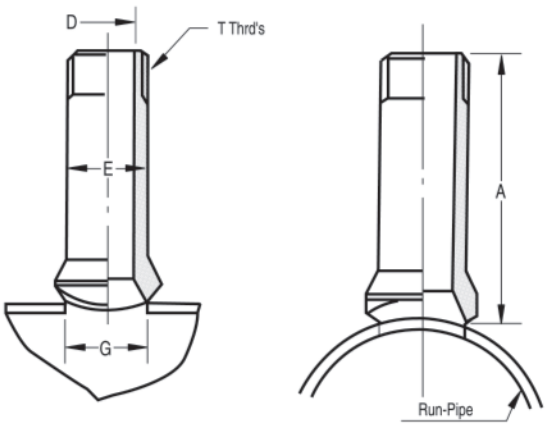

Swaged Nipple

Large end Size	Small end Size	Length (mm)
½	⅜ − ⅛	70
¾	½ − ⅛	76
1	¾ − ⅛	89
1¼	1 − ⅛	102
1½	1¼ − ⅛	114
2	1½ − ⅛	165
2½	2 − ⅛	178
3	2½ − ⅛	203
3½	3 − ⅛	203
4	3½ − ⅛	229

SHAPE

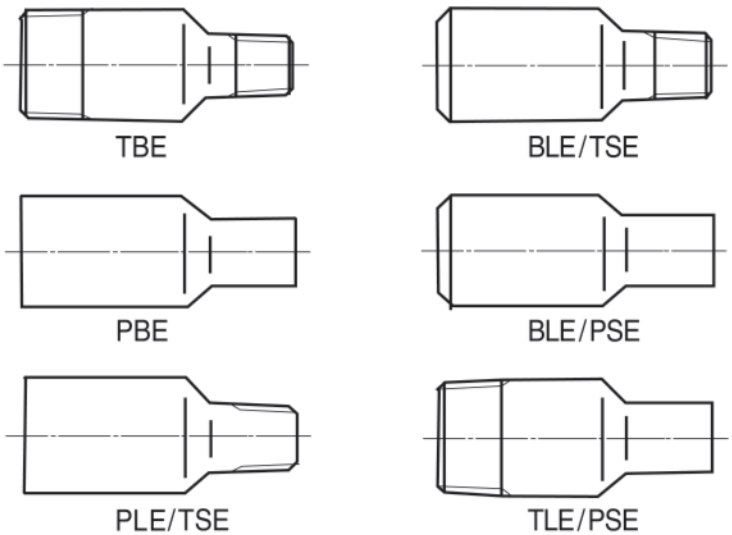

TBE	Threaded both end
PBE	Plain both end
PLE/TSE	Plain large end-Threaded small end
BLE/TSE	Beveled large end-Threaded small end
BLE/PSE	Beveled large end-Plain small end
TLE/PSE	Threaded large end-Plain small end

Weldolets

STD(Sch 40), XS(Sch 80)

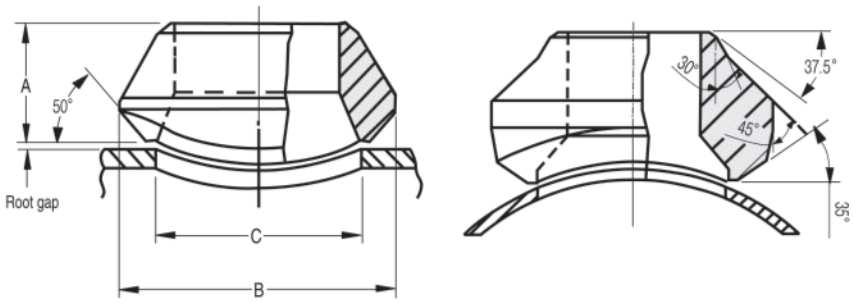

Outlet Size	A		B		C		APP'Weight(kg)	
	STD	XS	STD	XS	STD	XS	STD	XS
½	19.1	19.1	34.9	34.9	23.8	23.8	0.08	0.09
¾	22.2	22.2	44.5	44.5	30.2	30.2	0.11	0.14
1	27.0	27.0	54.0	54.0	36.5	36.5	0.23	0.21
1¼	31.8	31.8	65.1	65.1	44.5	44.5	0.36	0.41
1½	33.3	33.3	73.0	73.0	50.8	50.8	0.45	0.5
2	38.1	38.1	88.9	88.9	65.1	65.1	0.80	0.80
2½	41.3	41.3	103.2	103.2	76.2	76.2	1.14	1.2
3	44.5	44.5	122.2	122.2	93.7	93.7	1.82	1.9
4	50.8	50.8	152.4	152.4	120.7	120.7	2.86	2.9
5	57.2	57.2	179.4	179.4	141.3	141.3	4.66	4.7
6	60.3	77.8	215.9	225.4	169.9	169.9	6.45	10.5
8	69.9	98.5	263.5	292.1	220.7	220.7	10.68	16.8
10	77.8	93.7	322.3	323.9	274.7	265.1	17.73	20.9
12	85.7	103.2	377.8	379.4	325.4	317.5	26.82	27.7
14	88.9	100.0	409.6	431.8	357.2	350.8	30.0	31.8
16	93.7	106.4	463.6	466.7	408.0	403.2	34.1	46.4
18	96.8	111.1	520.7	523.9	458.8	455.6	44.1	59.1
20	101.6	119.1	571.5	582.6	508.0	509.6	53.6	71.8
24	115.9	139.7	689.0	708.0	614.4	638.2	100.0	131.8
26	119.1	146.1	738.2	765.2	666.8	692.2	120.5	159.1

- Applicable Run Pipe Sizes are From out-Let Size to 36”
- Standard Weight Fittings are the Same as Schedule 40 Fittings Until 10” and Extra Strong Fittings are the Same as Schedule 80 Until 8”
- Pipe Schedule Numbers and Weight Designations are in Accordance With ASME B36.10M
- When Ordering Weldolets, Include the Quantity, Size(Run and Out-let), Description(Weldolets, Schedule Number) and Material

Weldolets

Sch 160, XXS

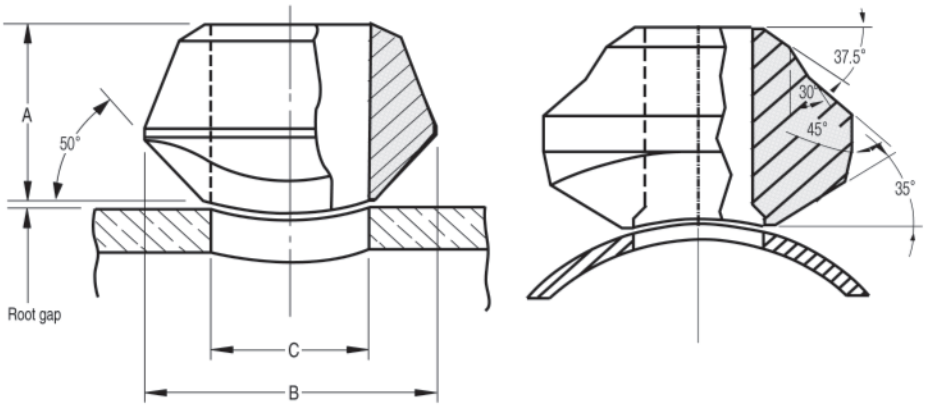

Outlet Size	A		B		C		APP'Weight(kg)	
	Sch160	XXS	Sch160	XXS	Sch160	XXS	Sch160	XXS
½	28.6	28.6	34.9	34.9	14.3	14.3	0.11	0.11
¾	31.8	31.8	44.5	44.5	19.1	19.1	0.32	0.32
1	38.1	38.1	50.8	50.8	25.4	25.4	0.38	0.38
1¼	44.5	44.5	61.9	61.9	33.3	33.3	0.57	0.57
1½	50.8	50.8	69.9	69.9	38.1	38.1	0.8	0.8
2	55.6	55.6	81.0	81.0	42.9	42.9	1.0	1.0
2½	61.9	61.9	96.8	96.8	54.0	54.0	1.54	1.54
3	73.0	73.0	120.7	120.7	73.0	73.0	2.9	2.9
4	84.1	84.1	152.4	152.4	98.4	98.4	4.8	4.8
5	93.7	93.7	187.3	187.3	122.2	122.2	6.5	6.5
6	104.8	104.8	220.7	220.7	146.1	146.1	12.7	12.7
8	111.1	111.1	284.2	284.2	173.1	173.1	20.5	20.5
10	125.4	125.4	312.7	312.7	215.9	215.9	38.6	38.6

- Applicable Run Pipe Sizes are From out-Let Size to 36”
- Pipe Schedule Numbers and Weight Designations are in Accordance With ASME B36.10M
- When Ordering Weldolets, Include the Quantity, Size(Run and Out-let), Description(Weldolets, Schedule Number) and Material

Sockolets

3000# 6000#

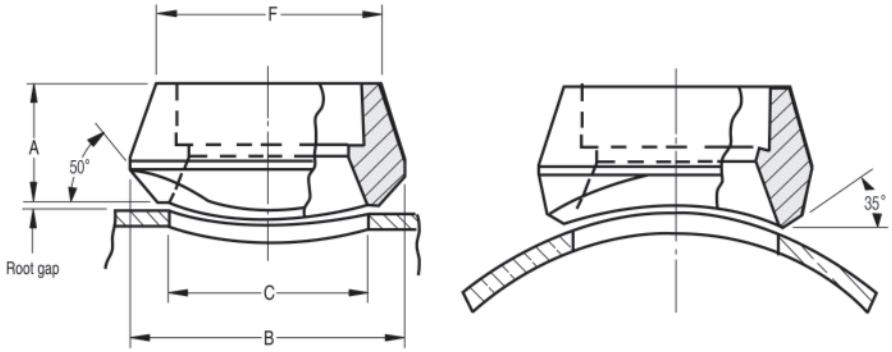

Outlet Size	A		B		C		F		APP'Weight(kg)	
	3000#	6000#	3000#	6000#	3000#	6000#	3000#	6000#	3000#	6000#
½	25.4	31.8	34.9	44.5	23.8	19.1	31.8	39.7	0.14	0.23
¾	27.0	36.5	44.5	50.8	30.2	25.4	36.5	45.2	0.15	0.36
1	33.3	39.7	54.0	61.9	36.5	33.3	46.0	57.2	0.27	0.59
1¼	33.3	41.3	65.1	69.9	44.5	38.1	55.6	65.1	0.39	0.73
1½	34.9	42.9	73.0	82.6	50.8	49.2	61.9	76.2	0.47	0.91
2	38.1	58.7	88.9	103.2	65.1	58.7	74.6	92.1	0.73	2.33
2½	46.0	–	103.2	–	76.2	–	87.3	–	1.25	–
3	50.8	–	122.2	–	93.7	–	104.8	–	1.73	–
4	57.2	–	152.4	–	120.7	–	130.2	–	3.3	–

- Applicable Run Pipe Sizes are From out-Let Size to 36”
- For the 3000# and 6000# Sockolets and Thredolets, Inside Bore, Thread, Socket Bore and Socket Depth Dimensions are According to ASME B16.11
- Pipe Schedule Numbers and Weight Designations are in Accordance With ASME B36.10M
- When Ordering Weldolets, Include the Quantity, Size(Run and Out-let), Description(Weldolets, Schedule Number) and Material

Thredolets

3000# 6000#

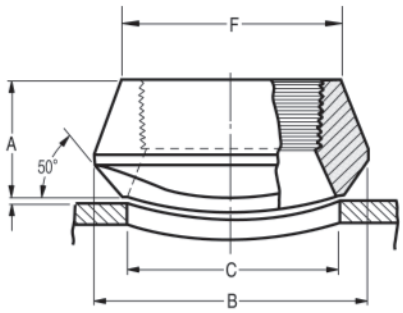

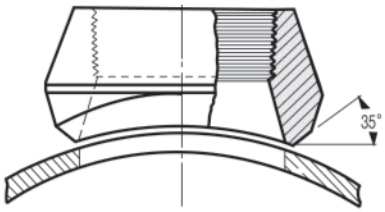

Out let Size	A		B		C		F		APP'Weight(kg)	
	3000#	6000#	3000#	6000#	3000#	6000#	3000#	6000#	3000#	6000#
½	25.4	31.8	34.9	44.5	23.8	19.1	31.8	39.7	0.11	0.20
¾	27.0	36.5	44.5	50.8	30.2	25.4	36.5	46.0	0.16	0.34
1	33.3	39.7	54.0	61.9	36.5	33.3	46.0	57.2	0.28	0.56
1¼	33.3	41.3	65.1	69.9	44.5	38.1	55.6	65.1	0.41	0.71
1½	34.9	42.9	73.0	82.6	50.8	49.2	61.9	76.2	0.45	0.89
2	38.1	52.4	88.9	103.2	65.1	69.9	74.6	92.1	0.8	2.30
2½	46.0	–	103.2	–	76.2	–	87.3	–	1.36	–
3	50.8	–	122.2	–	93.7	–	104.8	–	1.98	–
4	57.2	–	152.4	–	120.7	–	130.2	–	3.22	–

- Applicable Run Pipe Sizes are From out-Let Size to 36”
- For the 3000# and 6000# Sockolets and Thredolets, Inside Bore, Thread, Socket Bore and Socket Depth Dimensions are According to ASME B16.11
- Pipe Schedule Numbers and Weight Designations are in Accordance With ASME B36.10M
- When Ordering Weldolets, Include the Quantity, Size(Run and Out-let), Description(Weldolets, Schedule Number) and Material